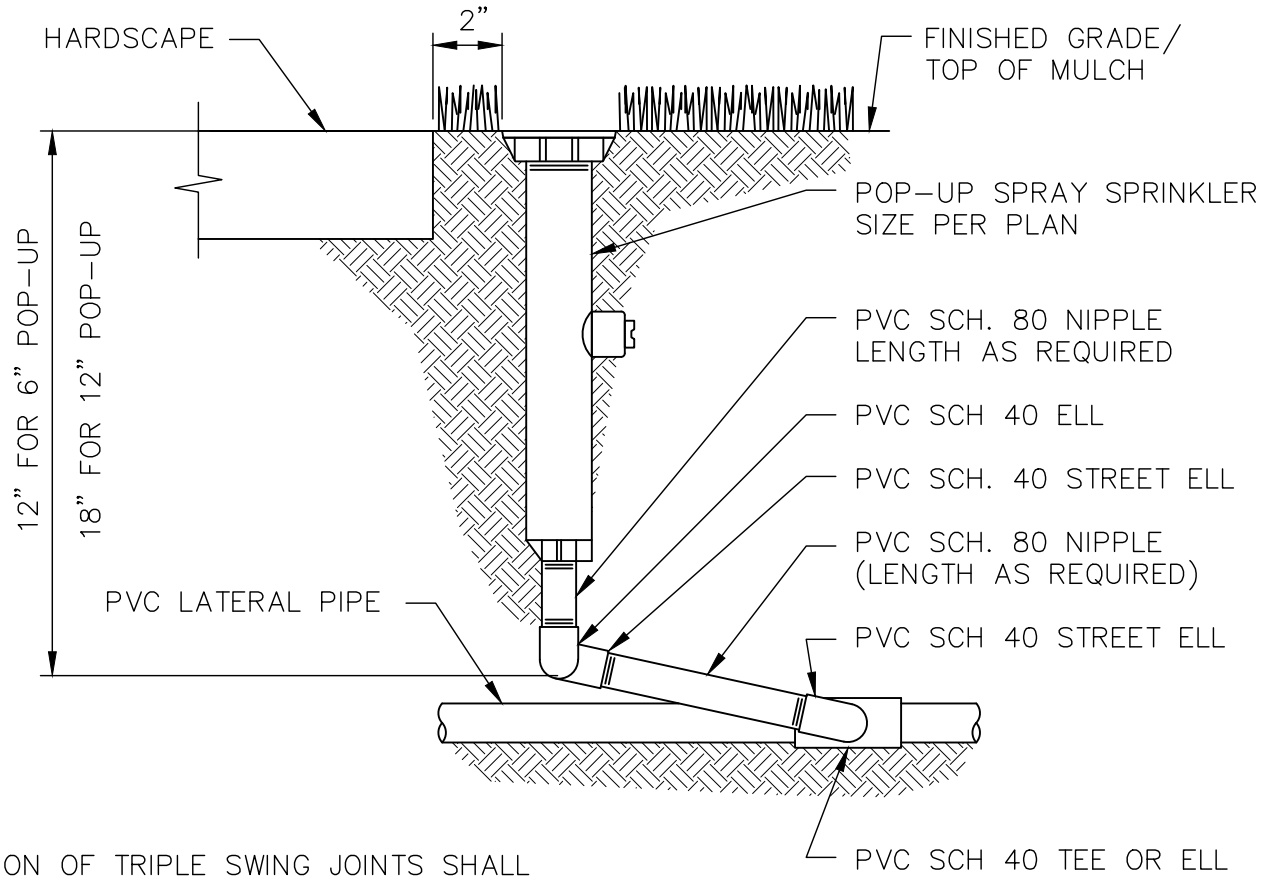

NOTE:

1. INSTALLATION OF TRIPLE SWING JOINTS SHALL BE AT AN ANGLE NO GREATER THAN 45 DEGREES TO HORIZONTAL

2. ALL PRE-MANUFACTURED TRIPLE SWING JOINTS SHALL BE MANUFACTURED WITH DORINGS AND SHALL BE RATED AT 200 PSI.

DATE: 09/22/2007		NOT TO SCALE	
REVISION	BY	APPROVED	DATE

CITY OF ELK GROVE - PUBLIC WORKS

POP-UP SPRAY SPRINKLER

APPROVED BY:

Robert Murdoch 10/24/2018

CITY ENGINEER DATE

DRAWING NUMBER

L - 10